AC-162G • 16 Chars×2 Line 1/16 Duty

FEATURE :

1.Construction : HTN / STN LCD panel, Bezel, Zebra and PCB.

2.Controller : KS0066U or Equivalent.

3.5V single power input.

4.Normal temperature type.

ELECTRICAL CHARACTERISTICS :

Item	Sym.	Condition	Typ. Value	Unit.
LCD Driving Voltage	VDD-VO	25℃	4.4	V
Supply Current	IDD	VDD=5.0V	1.5	mA

INTERFACE :
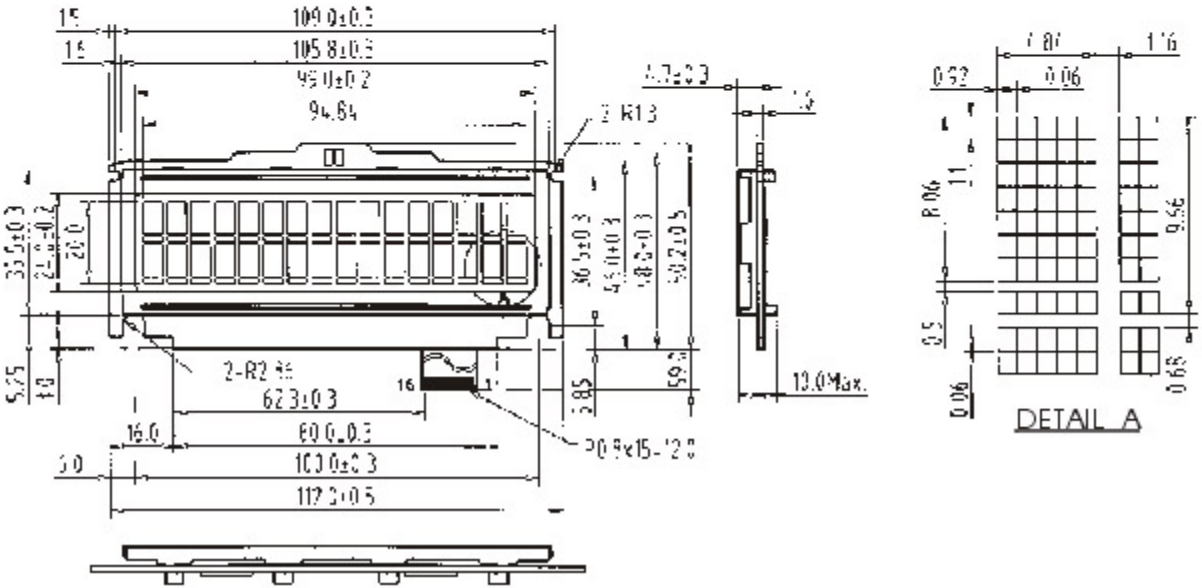
1	2	3	4	5	6	7	8	9	10	11	12	13	14	15	16
VSS	VDD	VO	RS	R/W	E	DB0	DB1	DB2	DB3	DB4	DB5	DB6	DB7	K	A