AC-204A • 20 Chars × 4 Line 1/16 Duty

FEATURE :

1. Construction : STN LCD panel, Bezel, Zebra and PCB.
2. Optional LED or EL back-light.
3. Controller : KS0066U or Equivalent.
4. 5V or 3.3V single power input. Built-in DC/DC converter while using 3.3V power input.
5. Normal / Extended temperature type.

ELECTRICAL CHARACTERISTICS :

Item	Sym.	Condition	Typ. Value	Unit.
LCD Driving Voltage	VDD-VO	25℃	5.0	V
Supply Current	IDD	VDD=5.0V	1.5	mA

INTERFACE :

1	2	3	4	5	6	7	8	9	10	11	12	13	14	15	16
VSS	VDD	VO	RS	R/W	E	DB0	DB1	DB2	DB3	DB4	DB5	DB6	DB7	LEDA	LEDK

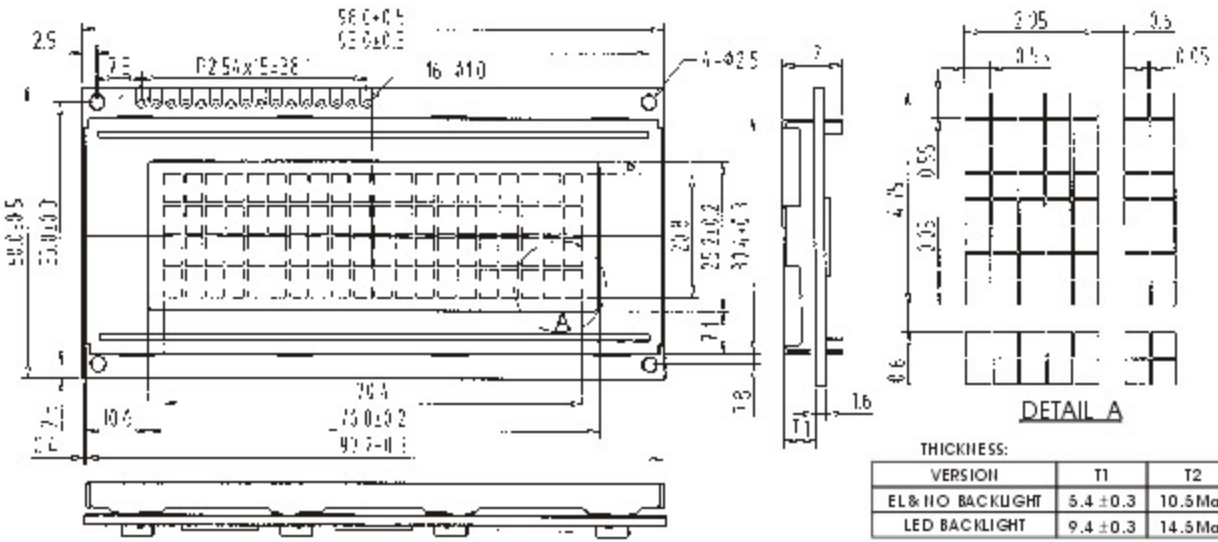

THICKNESS:

VERSION	T1	T2
EL & NO BACKLIGHT	5.4 ±0.3	10.5Max
LED BACKLIGHT	9.4 ±0.3	14.5Max